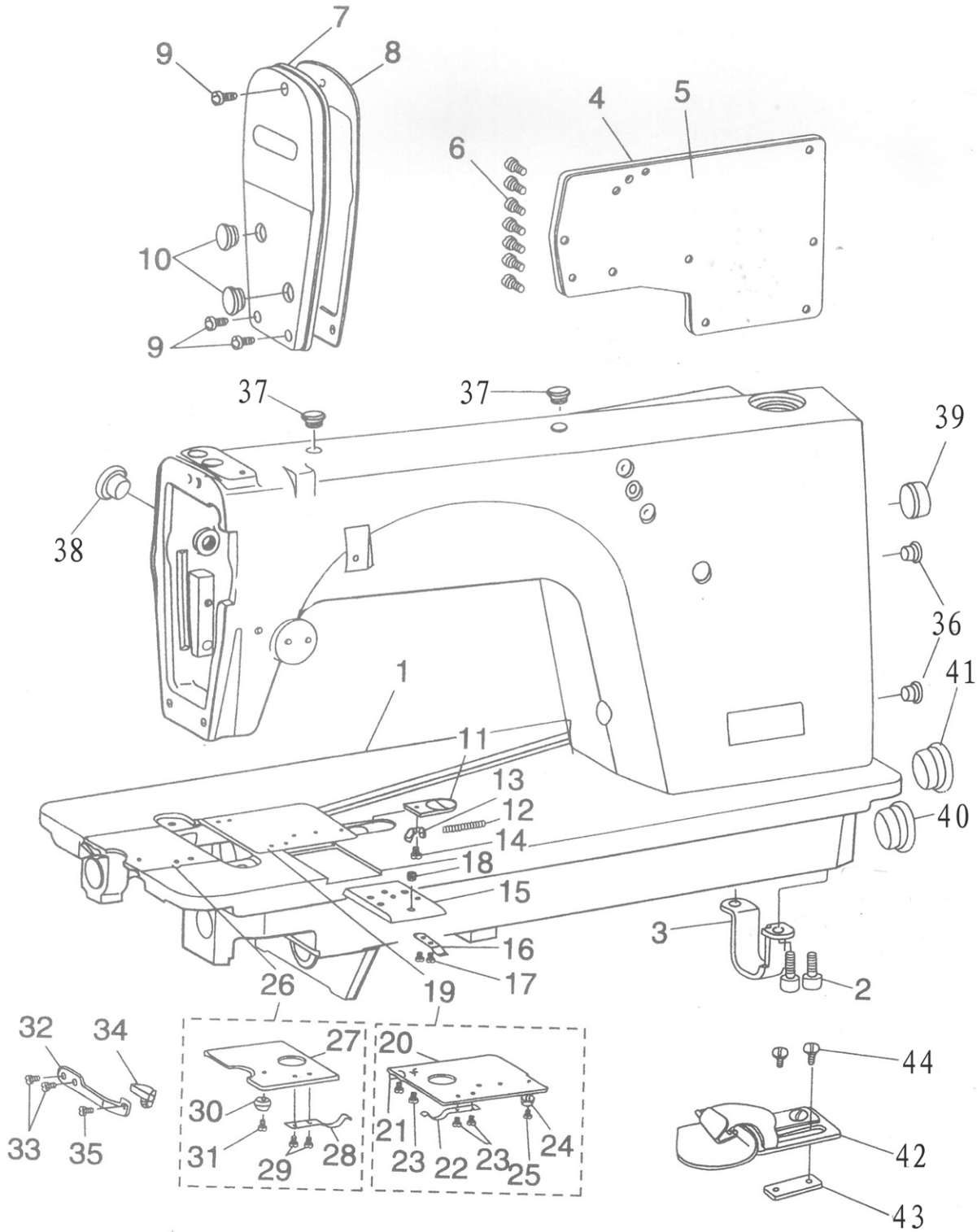
7
9
8
10
9
4
5
6
37
37
39
38
36
41
1
11
13
12
14
40
18
15
16
17
3
2
26
19
32
34
27
20
30
21
33
35
31
29
28
23
22
23
25
24
44
42
43

一、机壳分组件 Arm bed components

序号 NO.	公司件号 Part NO.	名称	Description	数量（Number）	备注
1	12500001	机壳部件	arm bed complete	1	
2	116S13002	底板支承螺钉	bed screw stud	2	
3	12512001	底板支承板	bed support	1	
4	300972	后窗板	side plate	1	
5	12522001	后窗板垫	gasket	1	
6	101S11001	后窗板螺钉	side plate screw	7	
7	300973	面板部件	face plate asm	1	
8	12822001	面板垫	face plate gasket	1	
9	101s11001	面板螺钉	screw	3	
10	10122003	面板调节螺孔塞	rubber plug	2	
11	12515001	凸轮盖压板	cam cover latch	1	
12	12527001	凸轮盖压板弹簧	spring	1	
13	12512002	凸轮盖压板弹簧座	spring suspension	1	
14	125S11004	凸轮盖压板座螺钉	screw	1	
15	12515002	附件安装板	attachment installing plate	1	
16	12512003	弹簧	Spring	1	
17	GS0128	附件安装板弹簧螺钉	Screw	2	
18	125S15008	附件安装板螺钉	screw	1	
19	1251500300	凸轮盖部件	came cover asm	-1	
20	12515008	凸轮盖	came cover	1	
21	12512004	凸轮盖托板	came cover	1	
22	12512005	凸轮盖弹簧	spring	1	
23	101S11019	凸轮盖弹簧螺钉	screw	4	
24	12515006	凸轮盖导轮	cam cover guide	1	
25	201S11002	凸轮盖导轮螺钉	screw	1	
26	1251500500	推板组件	bed slide asm	1	
27	12615002	推板	bed slide	1	
28	12512006	推板簧	spring	1	
29	101S11019	推板簧螺钉	screw	2	
30	12515006	推板导轮	bed slide guide	1	
31	201S11002	推板导轮螺钉	screw	1	
32	12512007	推板锁簧	bed slide lock spring	1	
33	101S11004	推板锁簧螺钉	screw	2	
34	12509001	推板簧把手	latcn	1	
35	101S11027	推板簧把手螺钉	screw	1	
36	12522006	轴套定位螺孔塞	rubber plug	2	
37	12522005	上轴套油线孔塞	ruber plug	2	
38	10122004	针杆曲柄螺孔塞	ruber plug	1	
39	12522022	送料针距调节器孔塞	ruber plug	1	
40	12522003	抬牙轴孔塞	ruber plug	1	
41	12522004	下轴盲孔塞	ruber plug	1	
42	1251201000	卷边器部件(1/4″)	folder	1	
43	12512013	卷边器垫块	gasket	1	
44	125S11006	卷边器螺钉	screw	2	

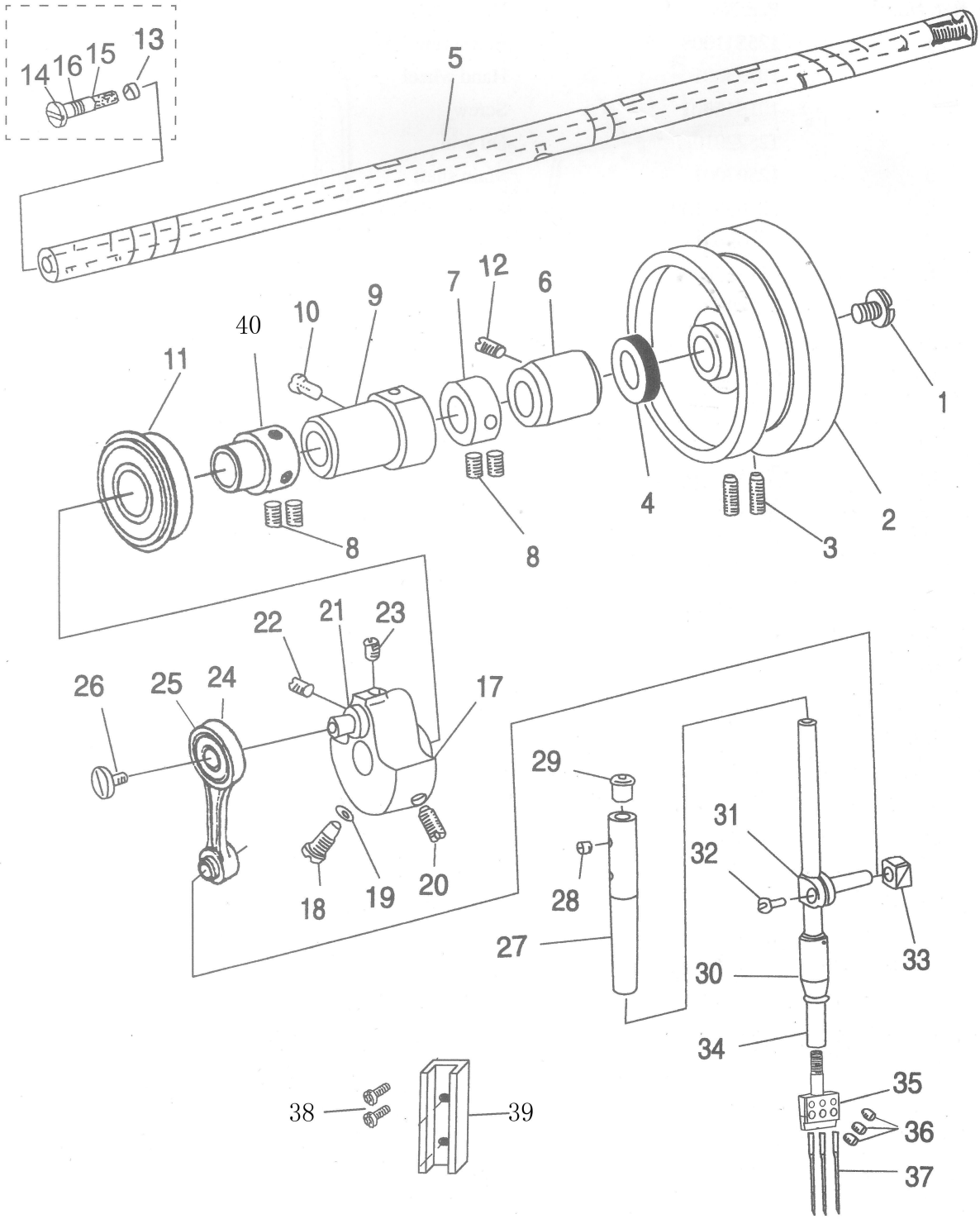
14
16
15
13
5
40
10
9
7
12
6
11
1
4
2
3
8
8
22
21
23
26
25
24
17
18
19
20
29
28
27
31
32
33
30
34
35
36
37
38
39

二、上轴针杆分组件 Main shaft & needle bar components

序号 NO.	公司件号 Part NO.	名称	Description	数量（Number）	备注
1	125S11008	上轴安全螺钉	end screw	1	
2	300092	皮带轮	hand wheel	1	
3	101S15001	上轮螺钉	screw	2	
4	1252200900	上轴油封组件	main shaft oil seal asm	1	
5	12502001	上轴	main shaft	1	
6	1250300100	上轴后轴套部件	main shaft bushing,rear	1	
7	10108001	上轴挡圈	main shaft thrust collar	1	
8	101S15007	上轴挡圈1螺钉	screw	2	
9	12503004	上轴中轴套	main shaft bushing,intermediate	1	
10	101S15006	送料摆杆座右销螺钉	screw	1	
11	B10003	轴承6004ZZN	bearing 6004zzn	1	
12	101s15010	螺钉	screw	1	
13	10122012	上轴孔塞	Roller felt	1	
14	12526026	曲柄油量调节销（有油）	Crank oil adjusting pin	1	
15	12522024	曲柄油量调节销套（有油）	Rubber bushing	1	
16	12522025	曲柄油量调节销O型圈（有油）	O-Rubber ring	1	
17	12504001	针杆曲柄	counterweight asm	1	
18	101S11003	针杆曲柄定位螺钉	screw	1	
19	GR1472	定位螺钉O型圈	O-Rubber ring	1	
20	101S15004	针杆曲柄紧固螺钉	screw	1	
21	12626003	针杆连杆销	needle crank	1	
22	101S15002	挑线曲柄紧固螺钉	screw	1	
23	101S15002	挑线曲柄螺钉	screw	1	
24	1250501000	针杆连杆组件	needle bar crank rod asm	1	
25	B04008	针杆连杆轴承	needle roller bearing	1	
26	101S17001	针杆连杆左旋螺钉	left twist screw	1	
27	12503009	针杆上衬套	needle barbushing upper	1	
28	409S15004	针杆上衬套螺钉	screw	1	
29	10122013	针杆上衬套孔塞	rubber plug	1	
30	10103023	针杆下衬套	needle bar bushing,lower	1	
31	10138002	针杆连接柱	needle bar connection asm	1	
32	101S11005	针杆连接柱螺钉	screw	1	
33	10109001	针杆连接柱滑块	crank slide block	1	
34	12602002	针杆	needle bar	1	
35	12534001	针夹(1/4″)	needle clamp(1/4)	1	
36	125S15007	支针螺钉	screw	2	
37	12617005	机针	needle	2	
38	101S11008	滑块导轨螺钉	screw SM11/64*40 L=8	2	
39	10109002	针杆连接柱滑块导轨	needle bag guide	1	
40	1220300100	上轴轴承套	main shaft bearing bushing	1	

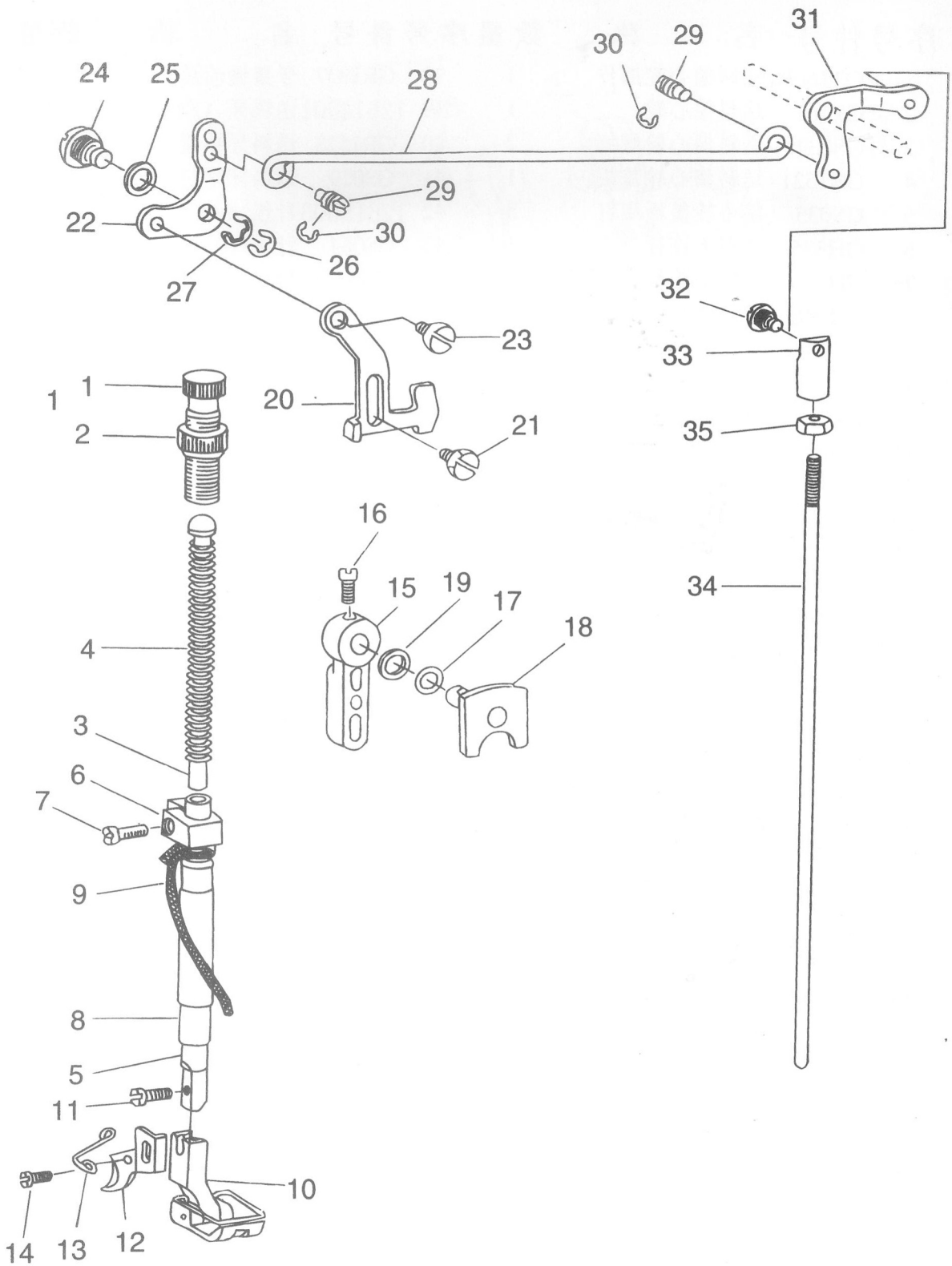
24
25
28
30
29
31
29
22
30
26
27
32
23
33
1
1
20
21
35
2
16
15
19
17
18
34
4
3
6
7
9
8
5
11
10
14
13
12

三、压料分组件 Presser bar components

序号 NO.	公司件号 Part NO.	名称	Description	数量 (Number)
1	10111034	调压螺钉	presser spring regulator	1
2	10111036	调压螺钉螺母	nut	1
3	10102003	调压导杆	presser bar guide bar	1
4	10127005	调压簧	presser spring	1
5	12502002	压杆	presser bar	1
6	12509002	压杆导架	presser guide bracket asm	1
7	116S11005	压杆导架螺钉	screw	1
8	10103012	压杆衬套	presser bar bushing,low	1
9	10423004	油线	Oil wick	1
10	1251600100	压脚部件1/4″	presser foot asm	1
11	101S11009	压脚螺钉	screw	1
12	12519001	切线刀	thread knife	1
13	12527003	切线刀导钩	thread knife guide	1
14	201S11002	切线刀导钩螺钉	screw	1
15	1251100100	压脚扳手组件	hand lifter asm	1
16	101S11001	压脚扳手螺钉	screw	1
17	12528002	垫圈	Washer	1
18	1251000100	压脚扳手凸轮部件	hand lifter cam asm	1
19	001004	压脚扳手轴O形圈	rubber ring	1
20	12512057	压脚升降板	lifting lever	1
21	125S20003	升降板轴位螺钉	hinge screw	1
22	12512014	抬压脚前杠杆	lifting link forlifting level	1
23	125S20001	前杠杆轴位螺钉	hinge screw	1
24	125S11001	前杠杆螺纹销	hinge pin	1
25	12528003	垫圈	Lifting lever gasket	1
26	H05006	前杠杆特制开口挡圈	snap ring	1
27	H05009	挡圈	snap ring	1
28	12512015	抬压脚拉杆	lifting lever connecting rod	1
29	125S11002	抬压脚拉杆螺钉	screw	2
30	H05003	抬压脚拉杆开口挡圈	snap ring	2
31	12512016	抬压脚后杠杆	lifting lever link rear	1
32	125S20004	后杠杆轴位螺钉	hinge screw	1
33	12526003	抬压脚顶杆接头	swivel	1
34	12512017	抬压脚顶杆	lifting lever connecting rod,vertical	1
35	116S16006	抬压脚顶杆螺母	nut	1

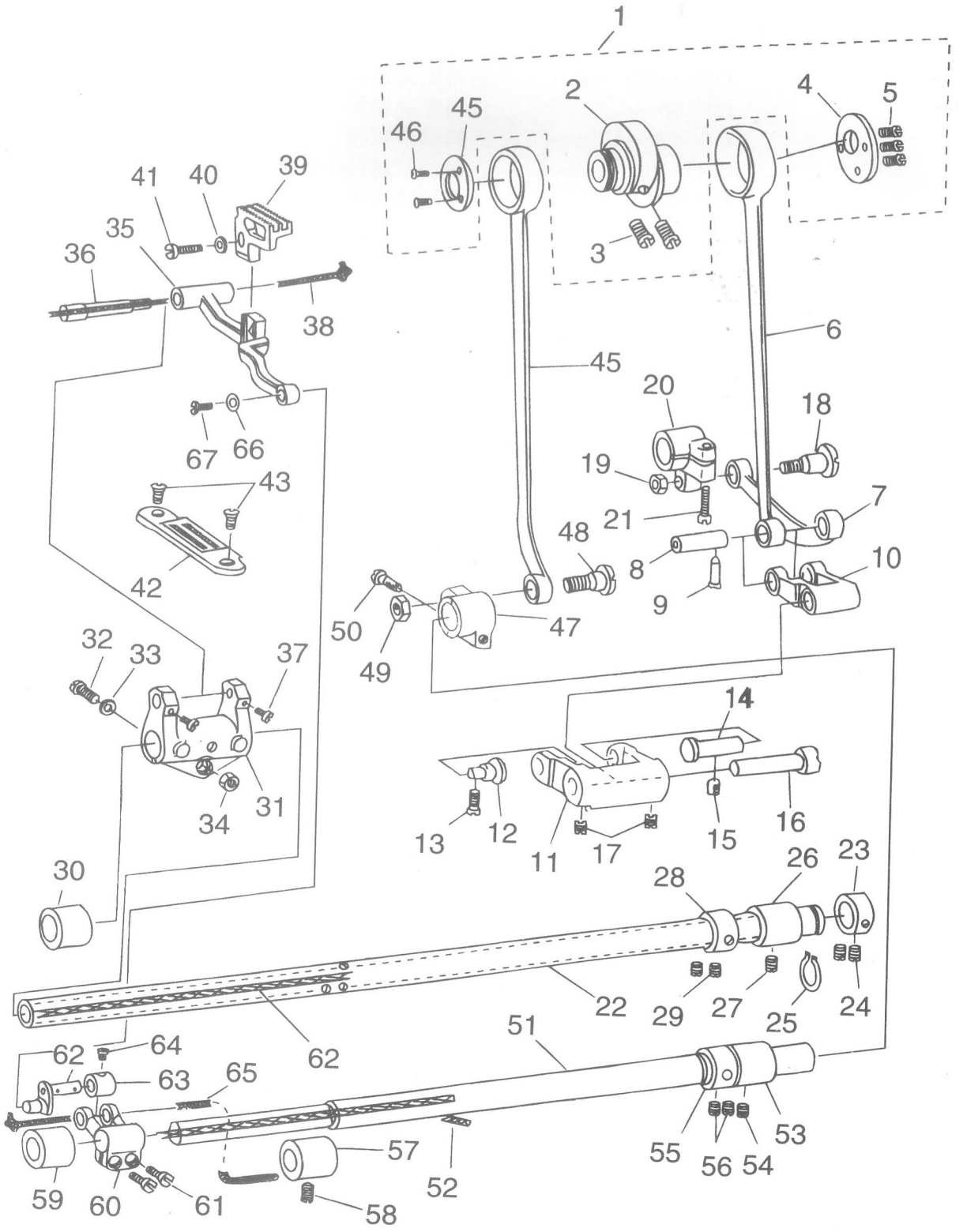
1
2
3
4
5
6
7
8
9
10
11
12
13
14
15
16
17
18
19
20
21
22
23
24
25
26
27
28
29
30
31
32
33
34
35
36
37
38
39
40
41
42
43
45
46
47
48
49
50
51
52
53
54
55
56
57
58
59
60
61
62
63
64
65
66
67

四、送料分组件 Feed mechanism components

序号 NO.	公司件号 Part NO.	名称	Description	数量（Number）	备注
1	1251000300	送料偏心轮部件	feed eccentric cam sam	1	
2	12510004	送料偏心轮	feed eccentric cam sam	1	
3	101S11013	送料偏心轮螺钉	screw	2	
4	12512018	送料偏心轮盖板	feed eccentric cam thrust washer	1	
5	125S17001	偏心轮盖板螺钉	screw	3	
6	12505001	送料大连杆	feed rocker shaft connecting rod	1	属于1251000300
7	12505002	送料小连杆	connecting rod	1	
8	12526004	送料连杆销	connecting pin	1	
9	125S11009	送料连杆销螺钉	screw	1	
10	12504002	送料摆杆	feed driving rocker asm	1	
11	12501003	送料摆杆座	reed driving rocker	1	
12	12526005	送料摆杆座左销	hinge stud	1	
13	101S11020	送料摆杆座左销螺钉	screw	1	
14	12526006	送料摆杆座右销	hinge pin	1	
15	125S11010	送料摆杆座右销螺钉	screw	1	
16	12526007	送料摆杆销	hinge pin	1	
17	125S15005	送料摆杆销螺钉	screw	2	
18	125S20002	送料曲柄轴位螺钉	hinge screw	1	
19	409S16015	送料曲柄轴位螺母	nut	1	
20	12504003	送料曲柄	feed rocker shaft cranck	1	
21	409S11015	送料曲柄螺钉	screw	1	
22	12502004	送料轴	feed rocket shaft	1	
23	12508002	送料轴薄挡圈	thrust collar	1	
24	401S15006	送料轴薄挡圈螺钉	screw	2	
25	H03001	送料轴轴用挡圈	retaining ring	1	
26	12503012	送料轴后轴套	bushing rear	1	
27	409S15004	送料轴后轴套螺钉	screw	1	
28	12508002	送料轴挡圈	thrust collar	1	
29	401S15006	送料轴挡圈螺钉	screw	2	
30	12503013	送料轴前轴套	feed rocker shaft bushing ,front	1	
31	12507001	牙架座	feed rocker	1	属于1250700300
32	409S11015	牙架座螺钉	screw	1	
33	GR1528	牙架座螺钉垫圈	Washer	1	
34	GL20	牙架座螺钉螺母	Nut	1	
35	12507002	牙架	washer	1	属于1250700300
36	12526008	牙架销	feed bar shaft	1	属于1250700300
37	209S11009	牙架销螺钉	screw	2	
38	10123008	油线	oil wick	1	
39	12514001	送料牙1/4″	reed dog (1/4)	1	
40	W01006	送料牙垫圈	washer	1	
41	116S11005	送料牙螺钉	screw	1	
42	12515007	针板1/4″	throat plate(1/4)	1	
43	125S17002	针板螺钉	screw	2	
44	12505003	抬牙连杆	feed driving shaft connecting ro	1	属于1251000300
45	12512019	抬牙连杆凸轮盖	feed driving eccentric thrust wa	1	
46	201S11007	抬牙连杆凸轮盖螺钉	screw	2	
47	12504004	抬牙后曲柄	feed driving shaft crank rear	1	
48	125S20002	抬牙连杆轴位螺钉	hinge screw	1	
49	409S16015	抬牙连杆轴位螺母	nut	1	
50	409S11015	抬牙后曲柄紧固螺钉	screw	1	
51	12502005	抬牙轴	feed driving shaft	1	

52	10423004	油线	oil wick	2	
53	12503012	抬牙轴后轴套部件	bushing ,rear	1	
54	101S15010	抬牙轴后轴套螺钉	screw	1	
55	10108003	抬牙轴后轴套挡圈	thrust collar	1	
56	101S15002	后轴套挡圈螺钉	screw	2	
57	12503017	抬牙轴中轴套	bushing,intermediate	1	
58	101S15010	抬牙轴中轴套螺钉	screw	1	
59	12503020	抬牙轴前轴套	feed rocker shaft bushing,front	1	
60	12504005	抬牙轴前曲柄	feed rocker shaftcranck	1	
61	201S11026	抬牙轴前曲柄螺钉	screw	2	
62	12505004	牙架连杆	feed bar link	1	属于1250700300
63	12508003	牙架连杆挡圈	thrust collar	1	
64	125S15003	牙架连杆挡圈螺钉	screw	2	
65	10423004	油线	oil wick	1	
66	12528001	牙架连杆锥孔垫圈	counter-sunk washer	1	属于1250700300
67	125S17006	牙架连杆垫圈螺钉	screw	1	属于1250700300

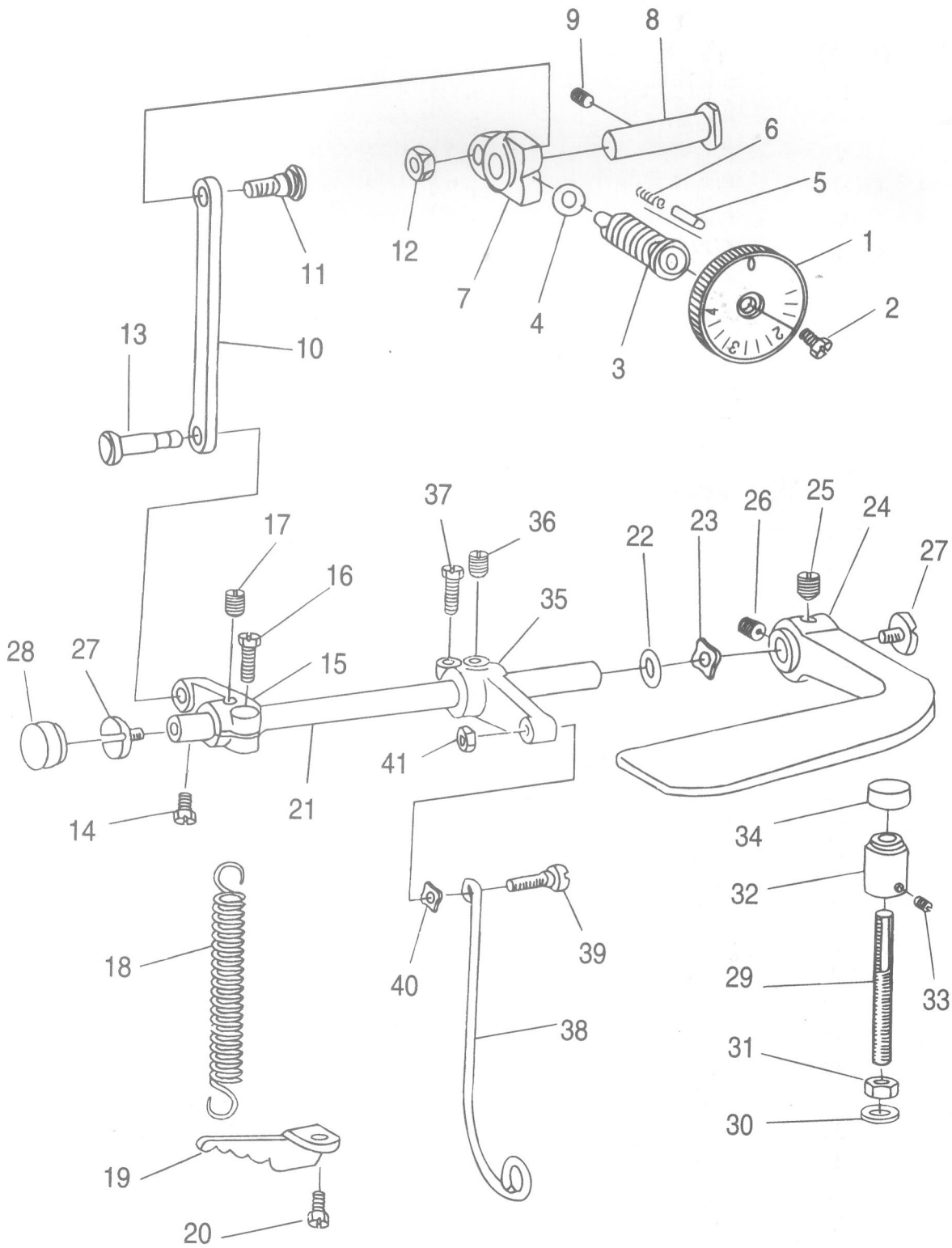
9
8
6
5
1
2
3
4
7
12
11
13
10
37
36
17
16
35
22
23
26
25
24
27
28
27
15
41
14
21
34
32
18
40
39
29
33
38
31
30
19
20

五、送料调节分组件 Feed regulating components

序号 NO.	公司件号 Part NO.	名称	Description	数量（Number）	备注
1	1251100300	送料距旋钮部件	stitch dial asm	1	
2	101S11022	送料距旋钮螺钉	screw	1	
3	12526009	送料调节螺柱	feed regulating screw	1	
4	001040	送料调节螺柱O形圈	o-rubber ring	1	
5	10126015	送料距锁合销	stitch dial lock pin	1	
6	10127010	送料距锁合销簧	stitch dial lock spring	1	
7	12504006	送料调节器	feed regulation	1	
8	12526011	送料调节器销	hinge pin	1	
9	101S15006	送料调节器销螺钉	screw	1	
10	12505005	送料调节器连杆	feed regulator connecting rod	1	
11	12526020	调节器连杆轴	regulator connecting shaft	1	
12	116S11017	调节器连杆轴螺钉	nut	2	
13	12526012	拉簧调节曲柄销	tension spring suspension stud	1	
14	116S11017	拉簧调节曲柄销螺钉	screw	1	
15	12504007	拉簧调节曲柄	tension spring suspension cranck	1	
16	101S11021	调节曲柄紧固螺钉	clamp screw	1	
17	101S15006	调节曲柄定位螺钉	screw	1	
18	12527004	倒送料轴拉簧	tension spring	1	
19	12512020	拉簧固定板	suspension bracket	1	
20	101S11008	拉簧固定板螺钉	screw	1	
21	12502006	倒送料轴	reverse feed control lever shaft	1	
22	001014	倒送料轴O形圈	rubber ring ,large	1	
23	W03010	倒送料轴弹性垫圈10	waved washer	1	
24	300974	倒送料扳手	reverse feed control lever	1	
25	101S15011	倒送料扳手定位螺钉	screw	1	
26	101S15007	倒送料扳手螺钉	screw	1	
27	125S11015	倒送料轴端螺钉	end screw	1	
28	12508006	倒送料轴挡圈	thrust collar	1	
29	125S30007	倒送料挡块螺杆	screw	1	
30	W01015	挡块螺杆垫圈	washer	1	
31	209S16006	挡块螺杆螺母	nut	1	
32	300975	倒送料挡块	lever stopper	1	
33	125S15004	倒送料挡块螺钉	screw	1	
34	12522009	倒料料挡块橡胶垫	rubber cushion	1	
35	12504008	倒送料曲柄	control lever crank,rear	1	
36	101S15006	倒送料曲柄定位螺钉	screw	1	
37	101S11021	倒送料曲柄螺钉	screw	1	
38	12512021	倒送料连杆	feed driving rocker arm connecti	1	
39	125S20006	倒送料连杆轴位螺钉	screw	1	
40	W04002	倒送料连杆轴位螺圈	washer	1	
41	401S16004	倒送料连杆轴位螺母	nut	1	

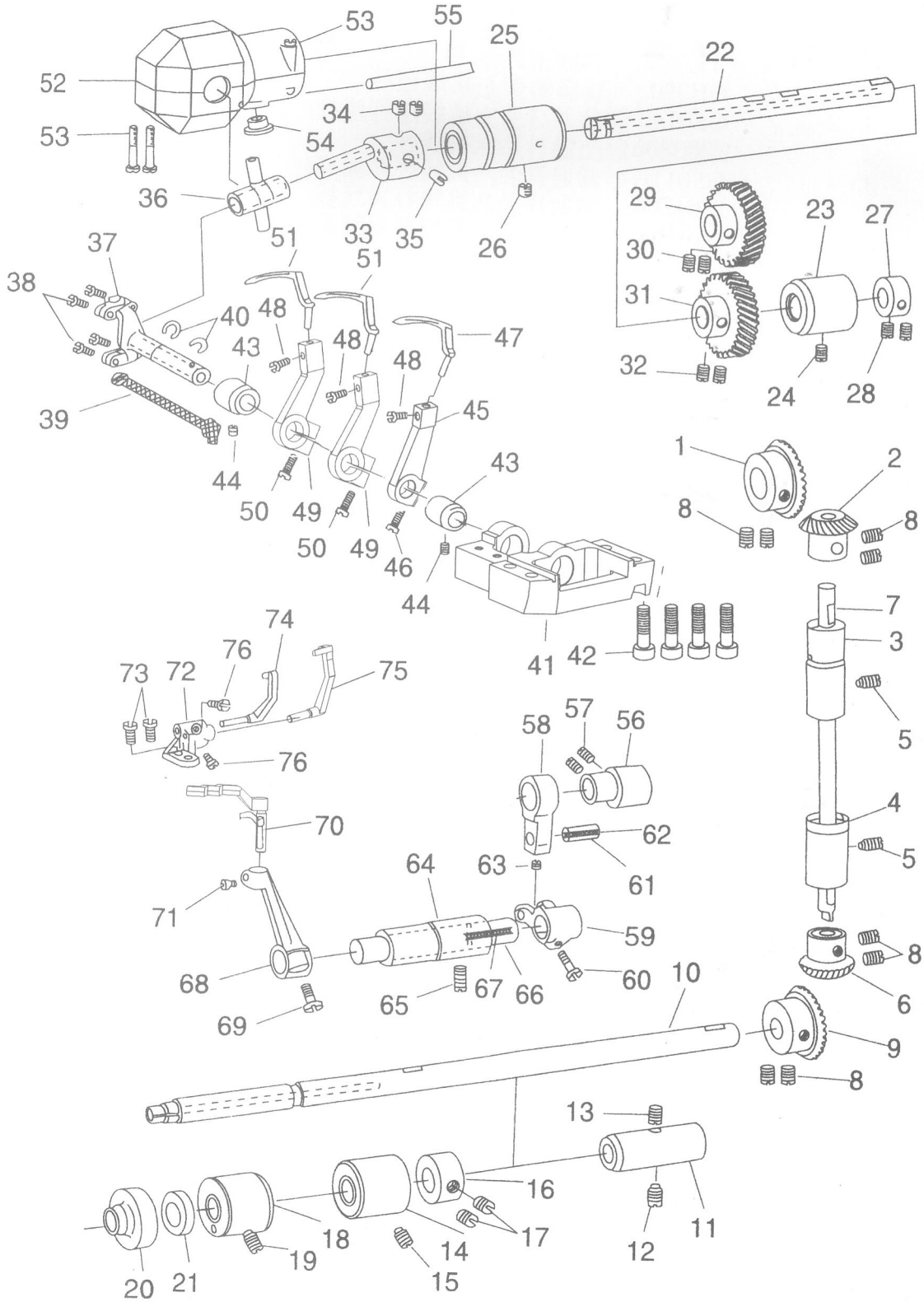
53
55
25
22
52
34
53
54
36
33
35
26
29
23
27
30
31
32
24
28
37
51
51
38
40
48
48
48
47
43
39
45
44
50
49
50
49
46
43
44
41
42
1
2
8
8
7
3
5
74
76
73
72
75
76
58
57
56
70
62
61
4
5
64
63
71
59
68
67
66
60
65
69
10
8
6
9
8
13
16
18
17
14
19
15
12
11
20
21

六、弯针勾线分组件 Looper thread retainer components

序号 NO.	公司件号 Part NO.	名称	Description	数量（Number）	备注
1	10125004	上轴伞齿轮	gear asm	1	
2	10125003	竖轴上伞齿轮	pinion asm	1	
3	12503021	竖轴上轴套	bushing,upper	1	
4	1250302200	竖轴下轴套部件	bushing,lower	1	
5	101S15010	竖轴轴套螺钉	screw	2	
6	10125003	竖轴下伞齿轮	gear asm	1	
7	12502007	竖轴	upright,shaft	1	
8	101S15007	伞齿轮螺钉	bushing,front asm,screw	8	
9	12525001	下轴伞齿轮	gear asm	1	
10	12502008	下轴	lower shaft asm	1	
11	12503025	下轴后轴套	bushing ,rear	1	
12	101S15010	下轴后轴套螺钉	screw	1	
13	GR1847	下轴后轴套油毡	Felt	1	
14	1250302600	下轴中轴套部件	bushing,intermediate	1	
15	101S15001	下轴中轴套螺钉	screw	1	
16	12508005	下轴挡圈	thrust collar asm	1	
17	101S15007	下轴挡圈螺钉	screw	2	
18	1250303200	下轴轴套部件	bushing ,front	1	
19	101S15001	下轴轴套螺钉	screw	1	
20	12503046	下轴前轴套油封套	looper thread guard bushing	1	
21	1252200700	下轴前轴套油封组件	looper thread guard bushing asm	1	
22	12502009	弯针轴	looper rocket shaftr	1	
23	1250302600	弯针轴后轴套部件	bushing,intermidate	1	
24	101S15001	弯针后轴套螺钉	screw	1	
25	1250303800	弯针轴前轴套部件	bushing,front	1	
26	101S15001	弯针轴前轴套螺钉	screw	1	
27	12508005	弯针轴挡圈	thrust collar asm	1	
28	101S15007	弯针轴挡圈螺钉	screw	2	
29	12525002	主动弯针齿轮	gear asm,upper	1	
30	101S15007	主动弯针齿轮螺钉	screw	2	
31	12525003	被动弯针齿轮	gear asm ,lower	1	
32	101S15007	被动变针齿轮螺钉	screw	2	
33	12504009	弯针曲柄	looper crank asm	1	
34	101S15007	弯针曲柄螺钉	screw	2	
35	125S30008	弯针曲柄调节螺钉	screw	1	
36	1250402100	弯针摆轴十字接头组件	Trunbion asm	1	属于1250100500
37	1250201000	弯针摆轴部件	looper rocker shaft asm	1	属于1250100500
38	209S11009	弯针摆轴盖螺钉	screw	4	属于1250100500
39	10423004	油线	oile wick	1	
40	GR1854	弯针摆轴挡圈	Snap ring	2	
41	12501005	弯针架座	looper mounting base	1	属于1250100500
42	125S13001	弯针架座螺钉	screw	4	
43	12503042	弯针摆轴轴套	bushing,rear	2	属于1250100500
44	401S15006	弯针摆轴轴套螺钉	screw	2	
45	12504012	左弯针曲柄	looper holder asm.(right)	1	
46	409S11015	左弯针曲柄螺钉	screw	1	
47	12517001	左弯针	looper(left)	1	
48	209S11012	弯针螺钉	screw	2	
49	12504013	右弯针曲柄	looper holder asm(right)	1	
50	409S11015	右弯针曲柄螺钉	screw	1	
51	12517002	右弯针	looper(right)	1	

52	1251202200	弯针曲柄罩壳部件	crank cover asm	1	属于1251202200
53	125S11007	曲柄罩壳螺钉	screw	3	属于1251202200
54	GR1462	曲柄罩壳孔塞	Rubber plug	1	属于1251202200
55	12921002	JK58420　　油管3X5	vinyl tube	1	
56	12510005	护针凸轮	needle guard cam asm	1	
57	101S15007	护针凸轮螺钉	screw	2	
58	12505007	护针连杆	needle guard crank rod	1	
59	12504014	护针叉形曲柄	rear needle guard rocker fork	1	
60	101S11020	护针叉形曲柄螺钉	screw	1	
61	12526014	护针曲柄销	pin	1	
62	10423004	油线	oil wick	1	
63	401S15006	护针曲柄销螺钉	screw	1	
64	12503043	护针轴套	bushing	1	
65	101s15010	护针轴套螺钉	screw	1	
66	12502012	护针轴	needle guard driving shaft asm	1	
67	10128008	护针轴油线	oil wick	1	
68	12504015	护针曲柄	rear needle guard rocker arm asm	1	
69	409S11015	护针曲柄螺钉	screw	1	
70	12517003	摆动护针(1/4″)	driving needle guard(1/4)	1	
71	209S11009	摆动护针杆螺钉	screw	1	
72	12501006	护针杆座	needle guard base	1	
73	101S11011	护针杆座螺钉	screw	2	
74	12517004	左固定护针杆	counter needle guard,left	1	
75	12517005	右固定护针杆	counter needle guard,right	1	
76	101S11005	左右固定护针杆螺钉	screw	2	

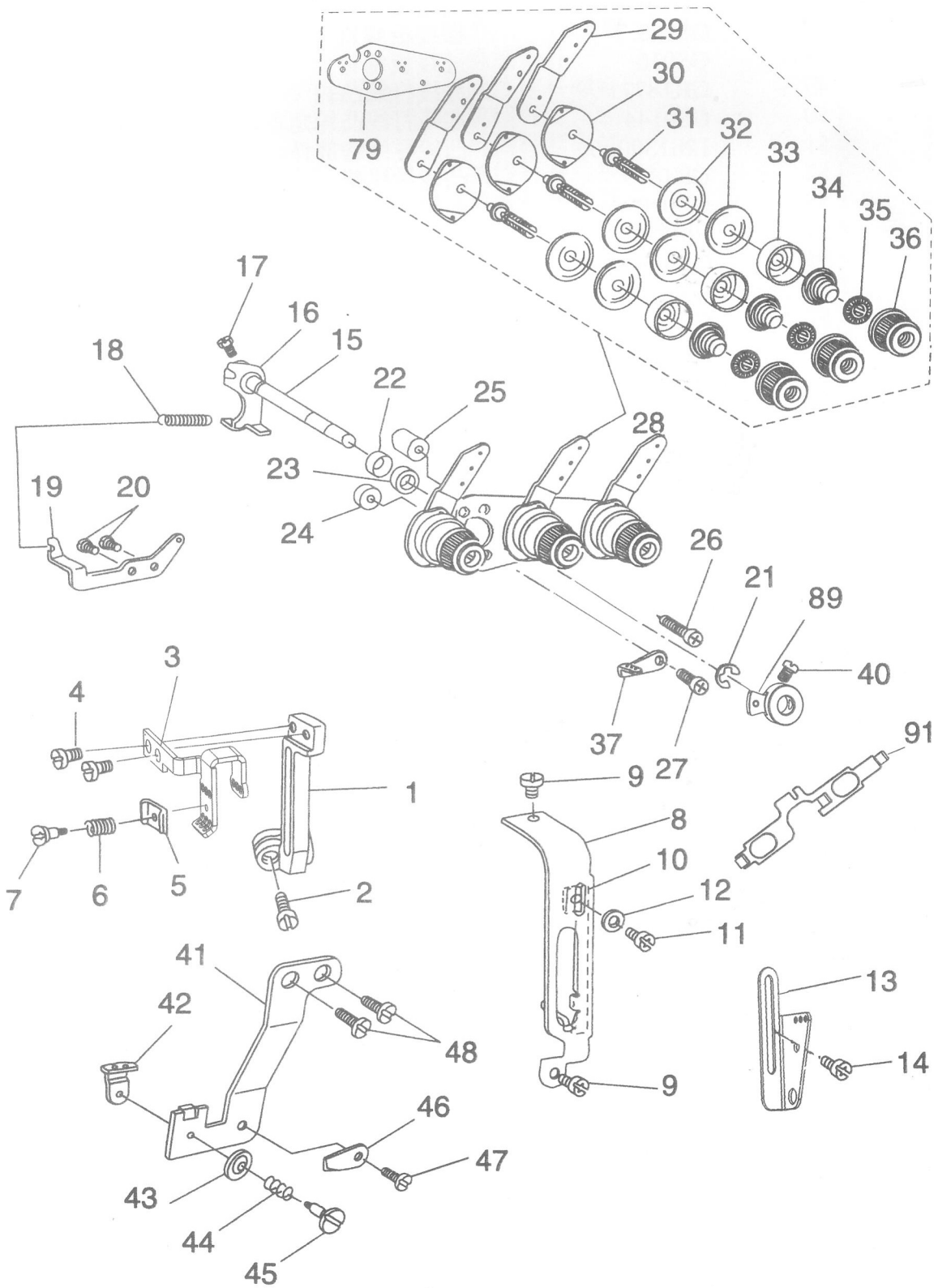
29
30
31
32
33
34
35
36
79
17
16
15
18
22
25
28
23
24
19
20
26
21
89
40
37
27
3
4
1
7
6
5
2
9
8
10
12
11
91
41
42
48
46
47
43
44
45
13
14
9

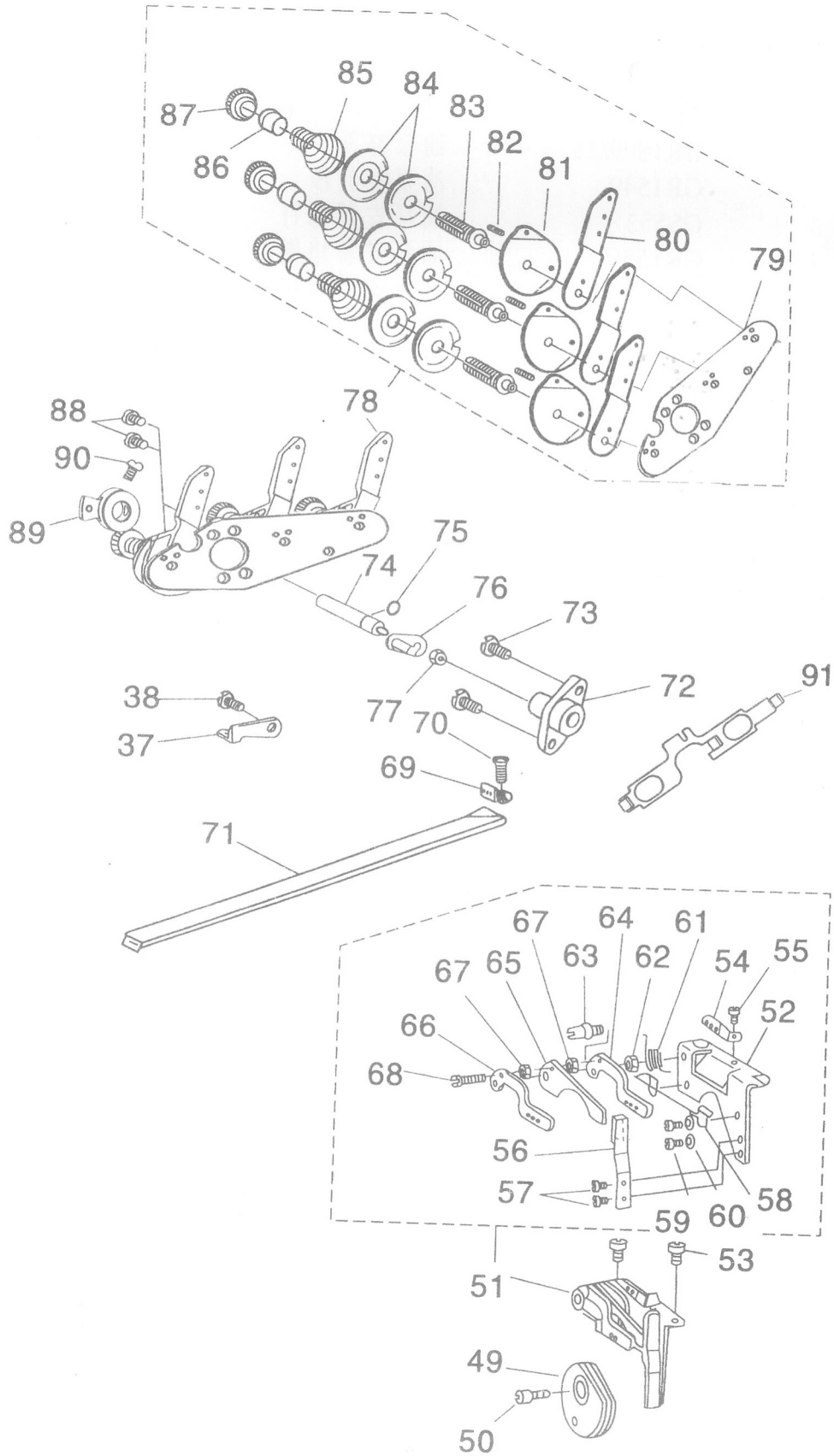
85
84
83
87
82
86
81
80
79
88
78
90
89
75
74
76
73
72
91
38
77
70
37
69
71
67
64
61
67
65
63
62
54
55
66
52
68
56
57
58
60
59
53
51
49
50

七、挑线、松线、夹线分组件 Thread take-up,tension,and tension releasing assembly complete

序号 NO.	公司件号 Part NO.	名称	Description	数量 (Number)
1	12505008	挑线连杆	thread take-up lever	1
2	409S11024	挑线连杆螺钉	screw	1
3	12512025	挑线杆	thread take-up	1
4	101S11005	挑线杆紧固螺钉	screw	2
5	12512026	挑线杆夹线板	tension plate	1
6	12527014	挑线杆夹线簧	tension spring	1
7	125S11018	挑线杆夹线板轴螺钉	screw	1
8	12512027	挡线杆护罩	thread take up lever guard	1
9	112S11014	挑线杆护罩螺钉	screw	2
10	12512028	线量调节板	take-up thread tension lever	1
11	112S11014	线量调节板螺钉	screw	1
12	W01006	调节板螺钉垫圈	washer	1
13	12612002	中间导线钩	Frame thread eyelet	1
14	112S11014	中间导线钩螺钉	screw	1
15	12502013	松线轴	tension release shaft	1
16	1250401600	面线松线曲柄部件	tension release arm asm	1
17	101S11012	面线松线曲柄螺钉	screw	1
18	12527015	抬压脚后杠杆弹簧	spring	1
19	12512031	后杠杆弹簧固定板	suspension bracket	1
20	112S11014	后杠杆弹簧固定板螺钉	screw	2
21	H05013	松线轴挡圈	snap ring	1
22	001027	松线轴O型圈	Oil seal ring	1
23	12509004	松线轴环	tension release shaft spacer	1
24	12509011	夹线器下安装垫	spacer(A)for installing plate	1
25	12509006	夹线器上安装垫	spacer(B) for installing plate	1
26	125S30010	夹线器上安装垫螺钉	screw	2
27	125S30009	夹线器下安装垫螺钉	screw	1
28	1251300100	面线夹线器部件	needle thread tension asm	1
29	12512032	面线单面导线板	needle thread tension guide plate	2
30	12512033	面线双面导线板	tension thread tension guide	2
31	125S30003	夹线螺钉	looper thread tension post	2
32	10112005	面线夹线板	tension disc	4
33	12511004	面线松线座	tension disc presser rube	2
34	10127002	面线夹线簧	tension spring	2
35	10112007	面线止动板	tension disc stopper	2
36	12511009	面线夹线螺母	tension nut	2
37	12512035	导线钩	frame thread guide	2
38	112S11014	导线钩螺钉	screw	1
39	12504017	面线松线爪	tension release latch	1
40	101S11012	面线松线爪螺钉	screw	1
41	GR1907	过线板架	Tension controller installing plate	1
42	GR1908	过线板	Take-up thread guide	1
43	GR1943	过线夹线板	Attachment installing plate	1
44	GW299	过线夹线簧	Take-up thread tension spring	1
45	GS0149	过线夹线螺钉	Take-up thread tension post	1
46	GR1986	松线板	Thread tension release guide latch	1
47	GS043	送线板螺钉	Screw	1
48	GS010	过线板螺钉	Screw	2

七、挑线、松线、夹线分组件(续)Thread take-up,tension,and tension releasing assembly complete

序号 NO.	公司件号 Part NO.	名称	Description	数量（Number）	备注
49	1251000600	底线打线凸轮	looper thread take-up cam	1	
50	125S17004	底线打线凸轮定位螺钉	screw	1	
51	1251300200	凸轮导线钩部件	looper thread guide plate	1	
52	12512040	凸轮导线架	thread guide plate	1	
53	112S11014	凸轮导线架螺钉	screw	2	
54	12512041	底线双线导线钩	Looper thread guide asm	1	
55	125S11004	底线双线导线钩螺钉	screw	1	
56	12512042	底线导线止动簧	thread guide stopper spring	1	
57	125S11004	底线导线止动簧螺钉	screw	2	
58	12527007	底线脱线钢丝	cast-off wire	1	
59	101S11027	底线脱线钢丝螺钉	screw	2	
60	W01005	底线脱线钢丝螺钉垫圈	washer	2	
61	12527008	底线导线簧	thread guide spring	1	
62	114S16004	凸轮过线螺钉螺母	nut	1	
63	125S30002	凸轮过线螺钉	thread guide stud	1	
64	12512043	凸轮导线钩（右）	looper thread guide,right	1	
65	12512044	凸轮脱线爪	cast-off plate	1	
66	12512045	凸轮导线钩（左）	looper thread guide,left	1	
67	12509007	凸轮导线环	collar	2	
68	125S11005	凸轮导线钩螺钉	screw	1	
69	12512046	底线导线钩	looper thread guide	1	
70	409S17001	底线导线钩螺钉	screw	1	
71	12512047	底线导线管	looper thread guide tube	1	
72	12504018	松线轴套	tension release shaft bushing	1	
73	125S11020	松线轴套螺钉	screw	2	
74	12502014	底线松线轴	looper thread release shaft	1	
75	001004	底线松线轴O型圈	rubber ring	1	
76	1250401900	底线松线轴曲柄部件	tension release arm asm	1	
77	114S16004	底线松线轴轴螺母	nut	1	
78	1251300300	底线夹线器部件	lower thread tension asm	1	
79	12512055	夹线器安装板	tension installing plate	2	
80	12512049	底线单面导线板	looper thread tension control pl	2	
81	12512050	底线双面导线板	thread guide	2	
82	P01009	底线夹线板止转销	spring pin	2	
83	125S30003	夹线螺钉	looper thread tension post	2	
84	12512051	底线夹线板	tension disc	4	
85	12527009	底线夹线簧	looper thread tension spring	2	
86	12509008	底线夹线止转圈	tension spring bushing	2	
87	125S16001	底线夹线螺母	tension post nut	2	
88	112S11014	夹线器安装板螺钉	screw	2	
89	12504020	底线松线爪	looper thread release latch	1	
90	101S11012	底线松线爪螺钉	screw	1	
91	12612004	松线器推板	Thread release Slide plate	1	

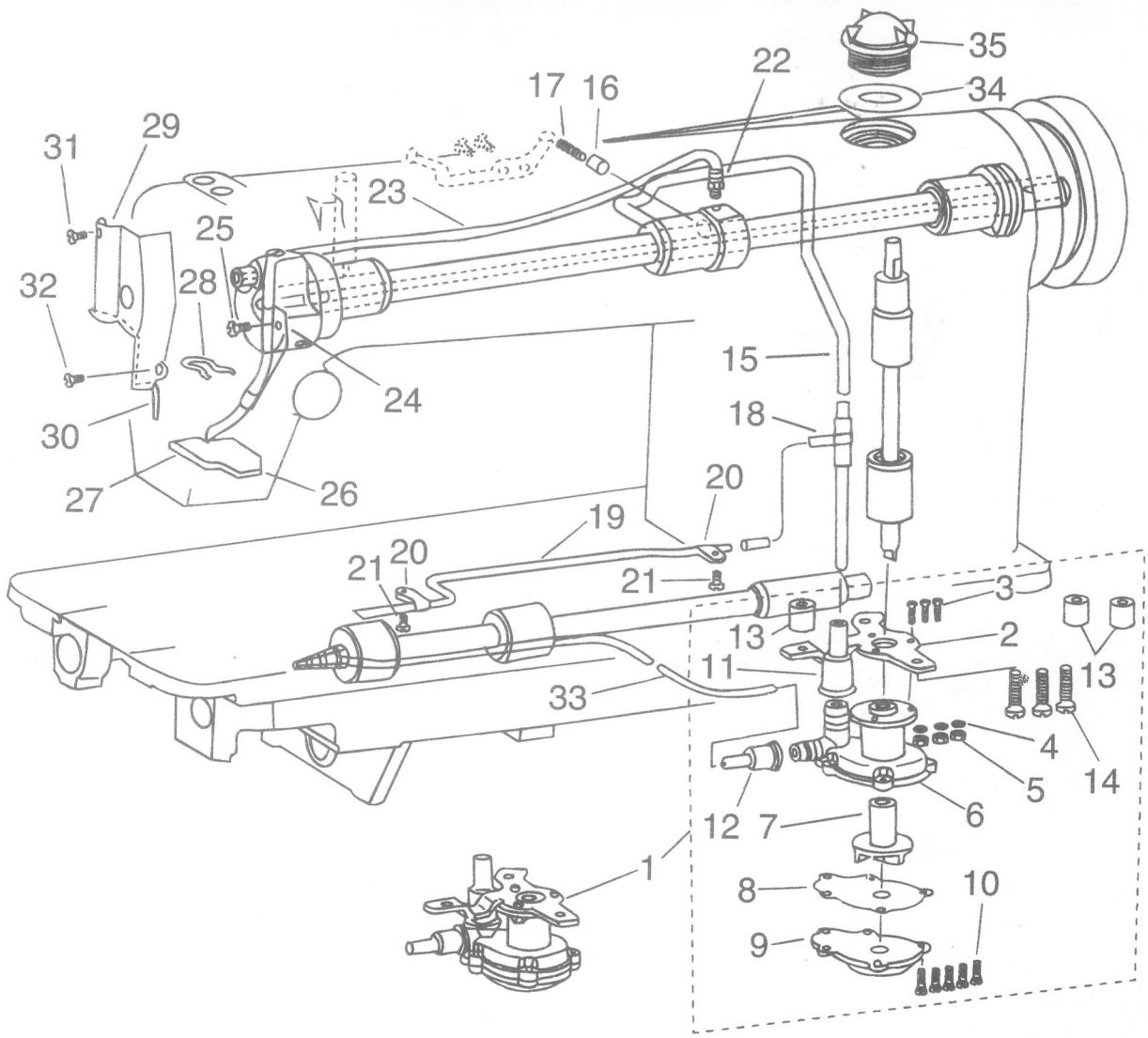
35
34
22
17
16
29
31
23
25
32
28
24
15
18
30
27
26
20
19
21
20
21
3
13
2
11
13
33
4
5
14
12
7
6
1
8
10
9

八、润滑分组件 Lubrication

序号 NO.	公司件号 Part NO.	名称	Description	数量（Number）	备注
1	1252000100	油泵部件	lubrication oil pump asm	1	
2	12512052	油泵安装板	oil pump installing base	1	
3	125S30011	油泵安装螺钉	screw	4	
4	GR1550	油泵安装垫圈	washer	3	
5	GL138	油泵安装螺母	Nnt	3	
6	1252000200	油泵体部件	washer	1	
7	12520003	油泵叶轮	oil pump impeller	1	
8	12512053	油泵叶轮托板	oil pump impeller cover	1	
9	1252000400	油泵盖部件	lubricating oil pump cover	1	
10	125S30012	油泵盖螺钉	screw	3	
11	12536002	上轴供油管接头	rubber joint	1	
12	12536003	下轴供油管接头	rubber joint	1	
13	12509011	油泵垫圈	Collar	3	
14	12530009	油泵螺钉	screw	3	
15	12521002	上轴供油管	Main shaft oil tube	1	
16	GR1563	回油泵柱塞	Oil return pump plunger	1	
17	GW260	柱塞簧	plunger spring	1	
18	12536004	齿轮供油管橡皮接头	Oil sight window base	1	
19	12521003	齿轮供油管	gear oil pipe	1	
20	12512054	齿轮供油管夹	holder	2	
21	101S11025	凸轮供油管夹螺钉	screw	2	
22	GS055	螺钉	Connecting screw	1	
23	12521006	回油管	Oil return tube asm	1	
24	12512054	回油管夹	oil return tube hokder	1	
25	101S11025	回油管夹螺钉	screw	1	
26	GR1567	回油除尘毡	Oil felt presser	1	
27	10423002	回油毡	oil felt	1	
28	12527011	回油毡夹	oil felt presser	1	
29	12512070	JK-8558-0829面部挡油板（有	Arm oil shield	1	
30	10423004	面部挡油板油线	oil wick	1	
31	GS069	螺钉	screw	1	
32	112S11014	面部挡油板下螺钉	screw	1	
33	12521004	下轴供油管	oil tube	1	
34	10122019	油窗O形圈	o-rubber ring	1	
35	10111004	油窗	oil sight window	1	

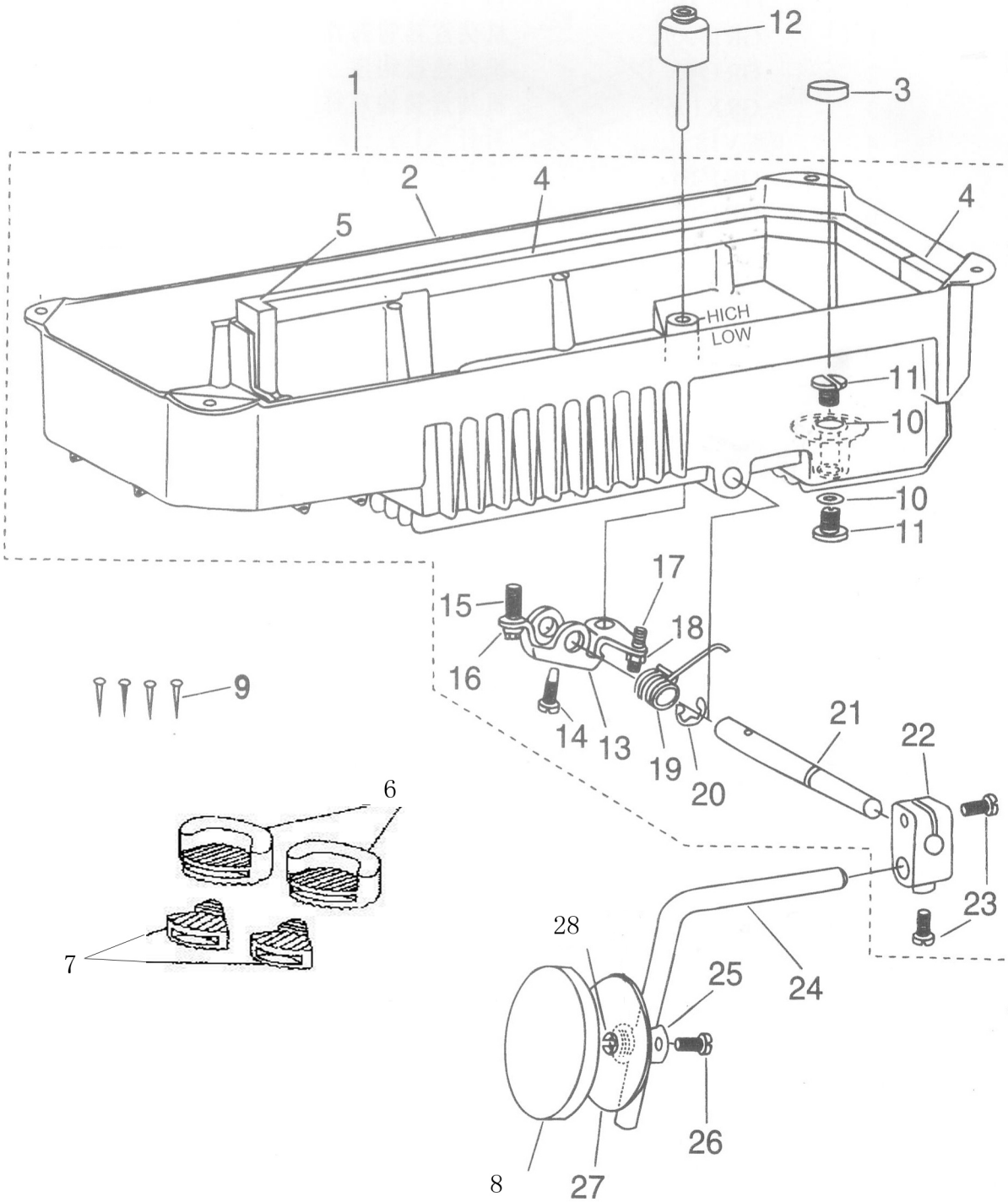
12
1
3
2
4
4
5
HICH
LOW
11
10
10
11
17
15
18
16
9
14
13
19
20
21
22
23
6
7
28
25
24
26
8
27

九、油盘、膝抬压脚分组件 Oil reservoir & knee lifter components

序号 NO.	公司件号 Part NO.	名称	Description	数量（Number）	备注
1	1250100700	油盘部件	oil reservoir asm	1	
2	12501009	油盘	oil reservoir	1	
3	10131001	油盘磁铁	oil reservoir magnet	1	
4	12522018	油盘侧面垫	gasket	2	
5	12522019	油盘端面垫	gasket	1	
6	10122023	机头防震垫块（大）	Cushion(big)	2	
7	10122022	机头防震垫块（小）	Cushion(small)	2	
8	10122024	操纵板软垫	knee press plate cover	1	
9	101S30010	油盘座钉	nail	4	
10	10122001	排油螺钉O形圈	oil drain cap gasket	2	
11	101S11028	排油螺钉	oil drain screw	2	
12	12531004	抬压脚顶销	knee press lifter rod	1	
13	12512059	抬压脚双向曲柄	lifting	1	
14	101S12002	双向曲柄螺钉	positioning screw	1	
15	101S15012	双向曲柄限位螺钉	positioning screw	2	
16	101S16004	双向曲柄限位螺母	nut	2	
17	101S15012	双向曲柄限位螺钉	positioning screw	2	
18	101S16004	双向曲柄限位螺母	nut	2	
19	10127016	双向曲柄扭簧	spring	1	
20	H05010	抬压脚轴开口挡圈	thrust ring	1	
21	12502015	抬压脚轴	knee press rod	1	
22	10101008	抬压脚操纵杆节头	bearing bracket	1	
23	101S12003	操纵杆节头螺钉	clamp screw	2	
24	10112028	操纵杆	knee lifter plate rod	1	
25	10112030	操纵板节头	knee press plate cover joint	1	
26	101S12004	操纵板节头螺钉	screw	1	
27	10112029	操纵板	knee press plate	1	
28	10122025	操纵杆垫	Rubber	1	

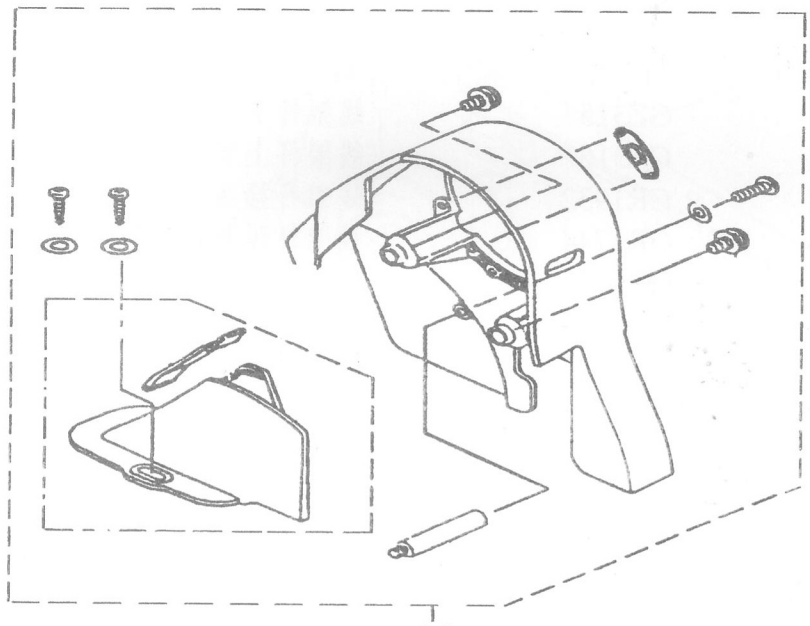
5

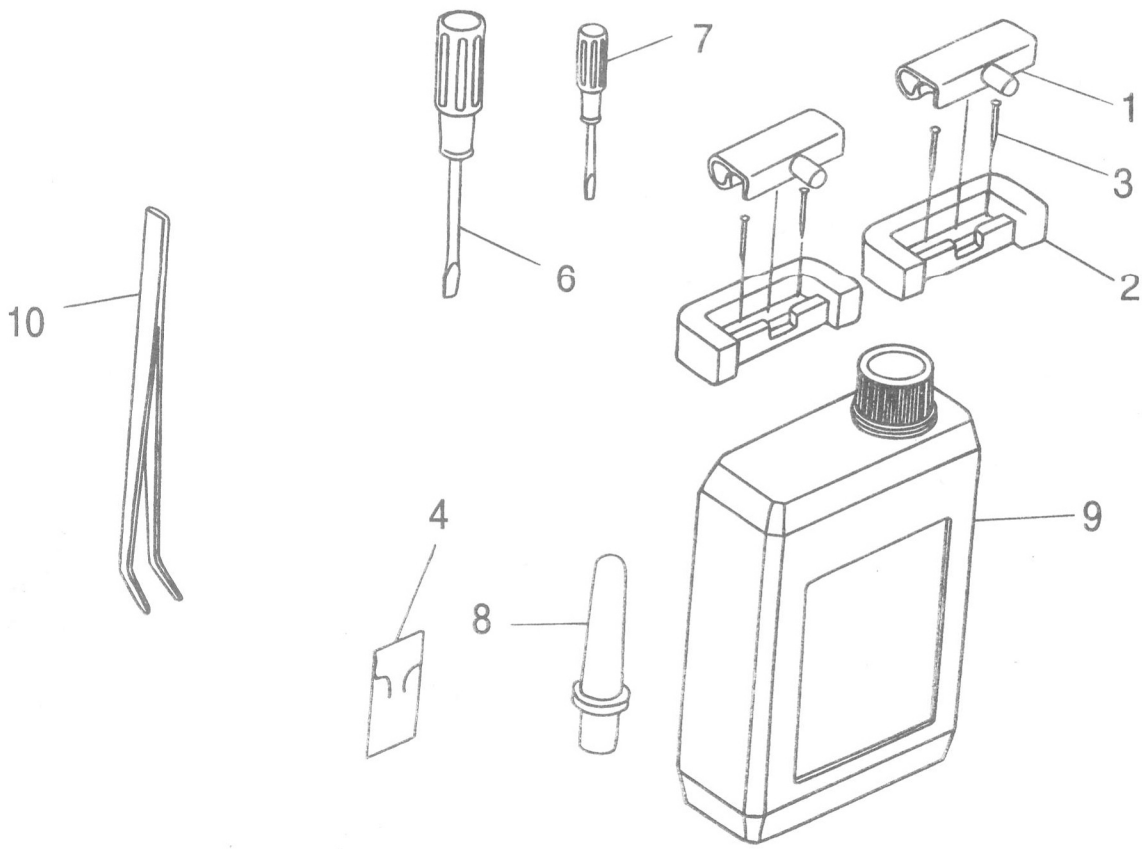
7
1
3
6
2
10
9
4
8

十、机头附件 Machine head accessories

序号 NO.	公司件号 Part NO.	名称	Description	数量 (Number)
1	1011203100	机头连接钩部件	nachine hinge plate asm	2
2	10122060	机头连接钩座	machine hinge plate	2
3	101S30010	机头连接钩座钉	nail	4
4	12617005	机针	needle	1包
5	12811003	皮带轮罩组件	Belt guard complete	1
6	10131003	螺丝刀（中）	screw driver(L)	1
7	10131004	螺丝刀（小）	screw driver(L)	1
8	10111011	机头支柱	machine rest pin	1
9	1011101200	油箱部件	lubricating unit case asm	1
10	20131051	镊子	tweezer	1

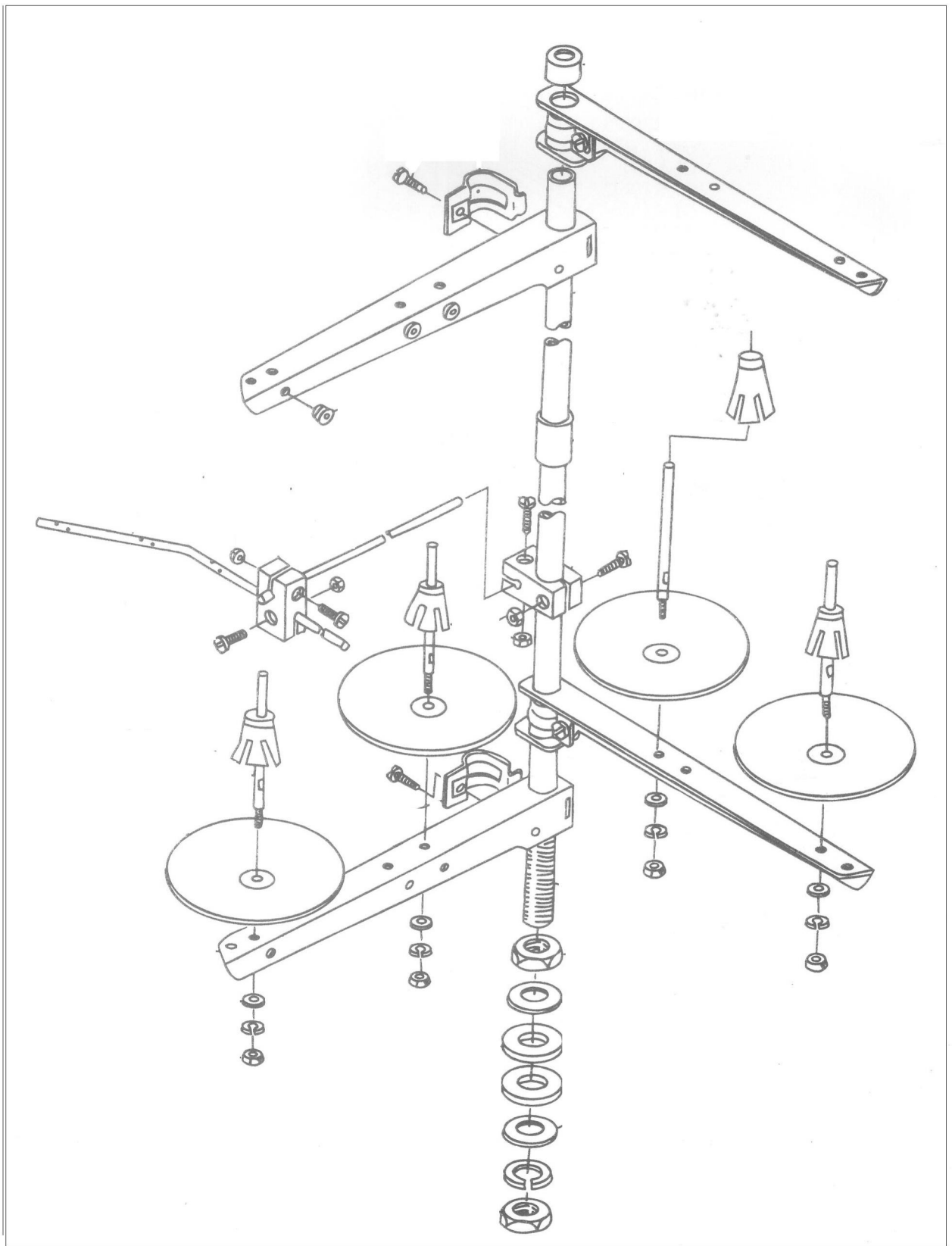

1

十一、四线团架分组件 Quadruple-thread spool stand sam

序号 NO.	公司件号 Part NO.	名称	Description	数量（Number）	备注
1	20131073	线架组件	Spool stand complete	1	

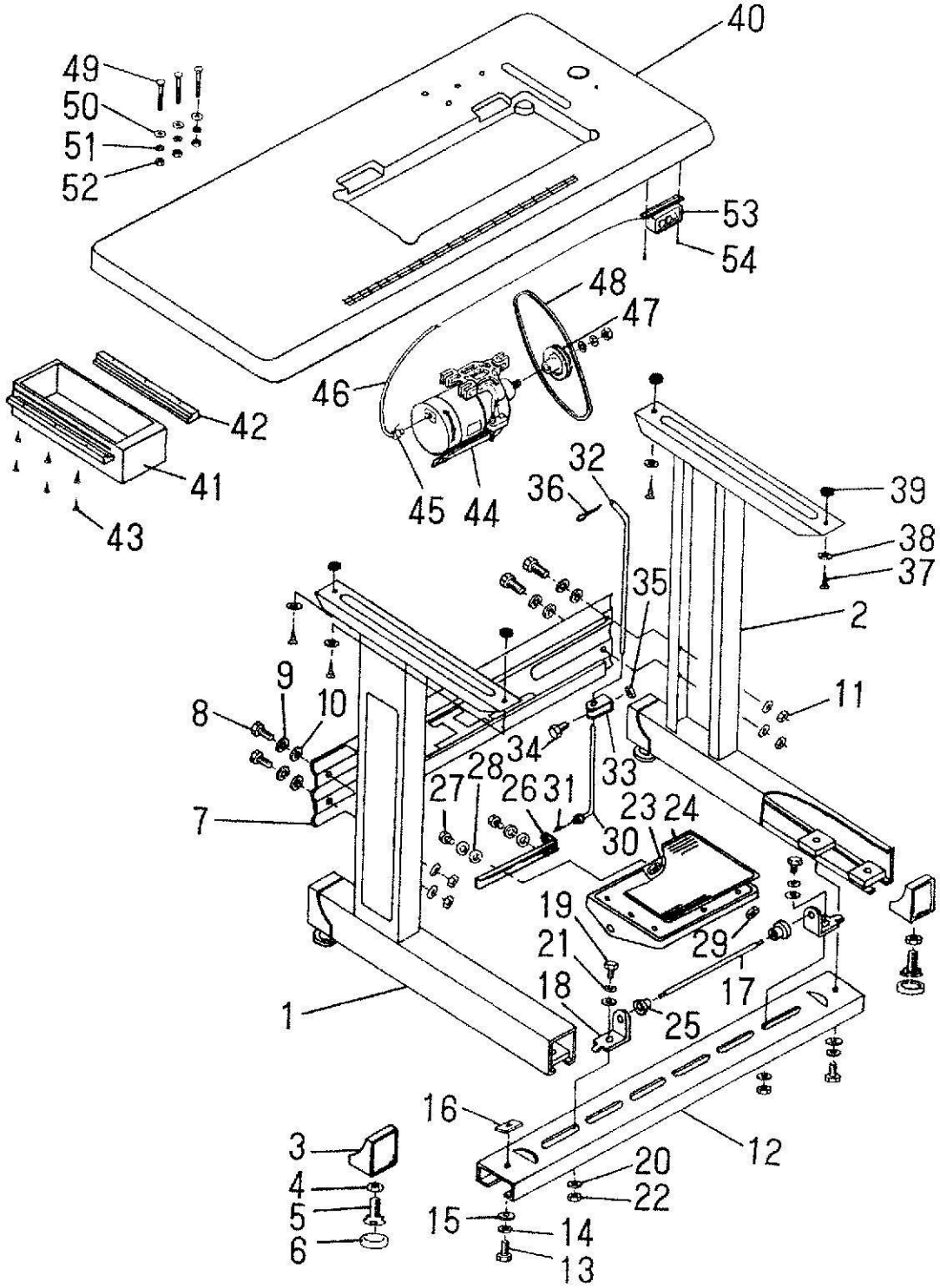
40
49
50
51
52
53
54
48
47
46
42
41
43
45
44
32
36
39
38
37
35
2
9
10
8
11
34
33
28
27
26
31
23
24
7
30
19
21
29
18
17
25
1
16
12
3
4
5
6
20
22
15
14
13

十二、机架、台板、电器分组件 Machine Stand、Table、Electric Appliance Components

序号 NO.	公司件号 Part NO.	名称	Description	数量（Number）	备注
1	1011204200	边架部件（左）	Stand side asm left	1	
2	1011204300	边架部件（右）	Stand side asm right	1	
3	10111015	边架座套	Rubber cushion	4	
4	N01010	螺母	Nut	4	
5	101s30015	调节座	Screw	4	
6	10122029	调节座橡胶	Space ring	4	
7	10112044	横档	Stand side support	1	
8	L02014	横档连接螺栓	Screw	4	
9	10128011	垫圈	Spring washer	4	
10	W01010	垫圈	Washer	8	
11	N01011	螺母	Nut	4	
12	10112045	踏板轴档	Treadle brace	1	
13	L02014	踏板轴档螺栓	Screw	2	
14	10128011	垫圈	Spring washer	2	
15	W01010	垫圈	Washer	2	
16	10112046	踏板轴档定位螺母板	Treadle brace locknut plate	2	
17	10102013	踏板轴	Treale shaft	1	
18	10112047	踏板轴座	Treale bravket	2	
19	L02014	踏板轴座螺栓	Screw	2	
20	W01010	垫圈	Washer	4	
21	10128011	弹簧垫圈	Spring washer	2	
22	N01011	螺母	Nut	2	
23	10112048	踏板	Trcable	1	
24	10122030	踏板垫	Gas Ket	1	
25	10103023	踏板衬套	Coller	2	
26	10112049	踏板杠杆	Tteadle pitman	1	
27	L02015	踏板杠杆螺栓	Screw	2	
28	W01003	垫圈	Washer	4	
29	N01012	螺母	Nut	2	
30	10112050	下拉杆	Pitman rod,lower	1	
31	10127019	拉杆弹簧	Spring	1	
32	10112051	上拉杆	Pitman rod,lower	1	
33	10112052	拉杆接头	Joint	1	
34	L02015	拉杆接头螺栓	Joint screw	1	
35	N01012	螺母	Nut	1	
36	10129001	上拉杆开口销	Pitman rod split pin (upper)	1	
37	101s30016	台板木螺钉	Table Wood screw	4	
38	10128012	垫圈	Table Wood screw washer	4	
39	10128013	台板垫圈	Table washer	4	
40	10132002	台板	Table	1	
41	10111016	抽斗	Drawer	1	
42	10111017	抽斗导轨	Drawer rail	2	
43	101s30017	抽斗导轨木螺钉	Drawer rail wood screw	6	
44	10133001	GFC4024型电机	Motor GFC4024 motor	1	
45	10130002	电机接线插头	Motor connecting wire plug	1	
46	10130003	电机接线	Motor wire	1	
47	10135004	电动机带轮	Motor pulley	1	
48	10135002	机头传动带	Machine driving beit	1	
49	101s30018	螺钉	Screw	3	
50	10128014	垫圈	Washer	3	
51	10128011	弹簧垫圈	Spring washer	3	

52	N01011	螺母	Nut	3	
53	10130004	电源开关	Power cource swith	1	
54	101s30019	电源开关木螺钉	Power cource swith wood screw	2	

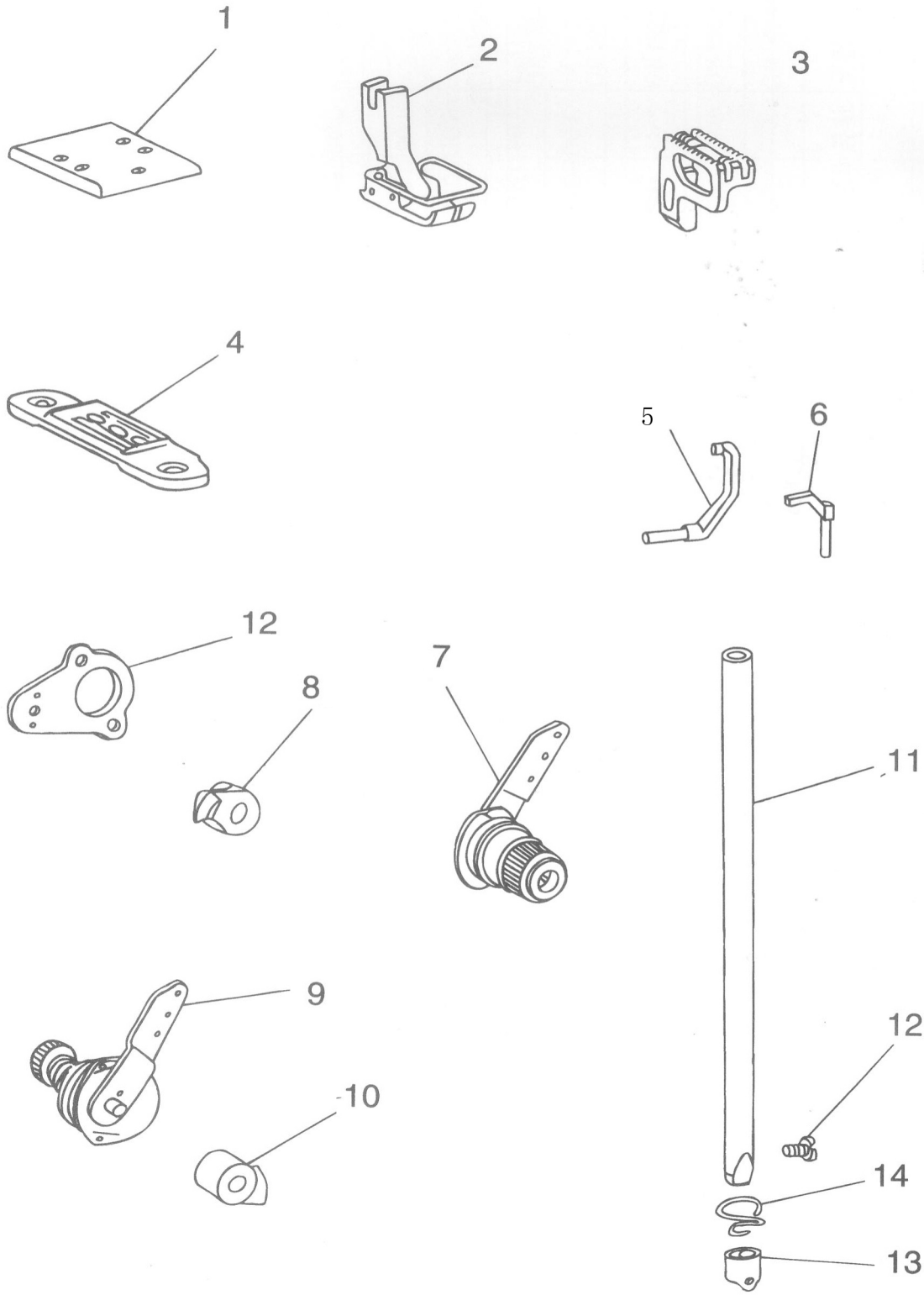
1
2
3
4
5
6
12
8
7
11
9
12
10
14
13

13、JK-8558W-1专用零件 Model one-needle high speed chainstitcher

序号 NO.	公司件号 Part NO.	名称	Description	数量（Number）	备注
1	12515002	附件安装板	attachment installing plate	1	
2	1251600100	压脚组件	presser foot asm.	1	
3	12514001	送料牙	feed dog	1	
4	12515007	针板	thread plate	1	
5	12517003	摆动护针杆	driving needle guard	1	
6	12517005	固定护针杆	counter needle guard	1	
7	1251300100	面线夹线器组件	needle thread tension asm	1	
8	12504017	面线松线爪	tension release latch	1	
9	1251300300	底线夹线器组件	lower thread tension asm	1	
10	12504020	底线松线爪	looper thread release latch	1	
11	12602002	针杆	needle bar	1	
12	125S15007	支针螺钉	screw	2	
13		针杆线钩	needle bar thread guide	/	
14	10113009	针杆下轴套线钩	thread guide	1	

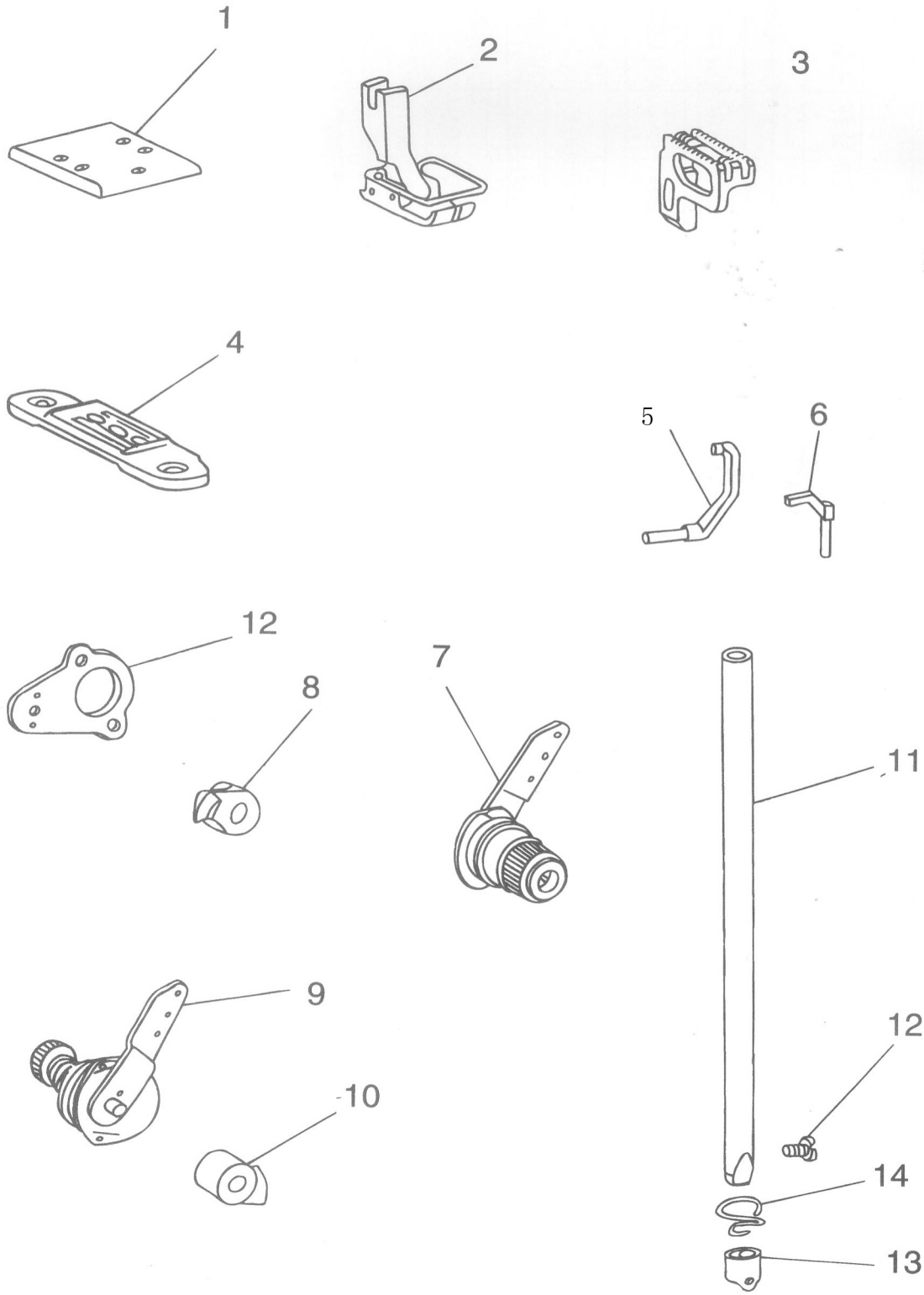
1
2
3
4
5
6
12
8
7
11
9
12
10
14
13

13、JK-8558W-2专用零件 Model one-needle high speed chainstitcher

序号 NO.	公司件号 Part NO.	名称	Description	数量（Number）	备注
1	12515002	附件安装板	attachment installing plate	1	
2	1251601000	压脚组件	presser foot asm.	1	
3	12514006	送料牙	feed dog	1	
4	12515016	针板	thread plate	1	
5	12517009	摆动护针杆	driving needle guard	1	
6		固定护针杆	counter needle guard	/	
7	1251300400	面线夹线器组件	needle thread tension asm	1	
8	12504022	面线松线爪	tension release latch	1	
9	1251300500	底线夹线器组件	lower thread tension asm	1	
10	12504023	底线松线爪	looper thread release latch	1	
11	11402035	针杆	needle bar	1	
12	101S11006	支针螺钉	screw	1	
13	10113002	针杆线钩	needle bar thread guide	1	
14	10113009	针杆下轴套线钩	thread guide	1	

14. 后拖轮装置/Puller device mechanism

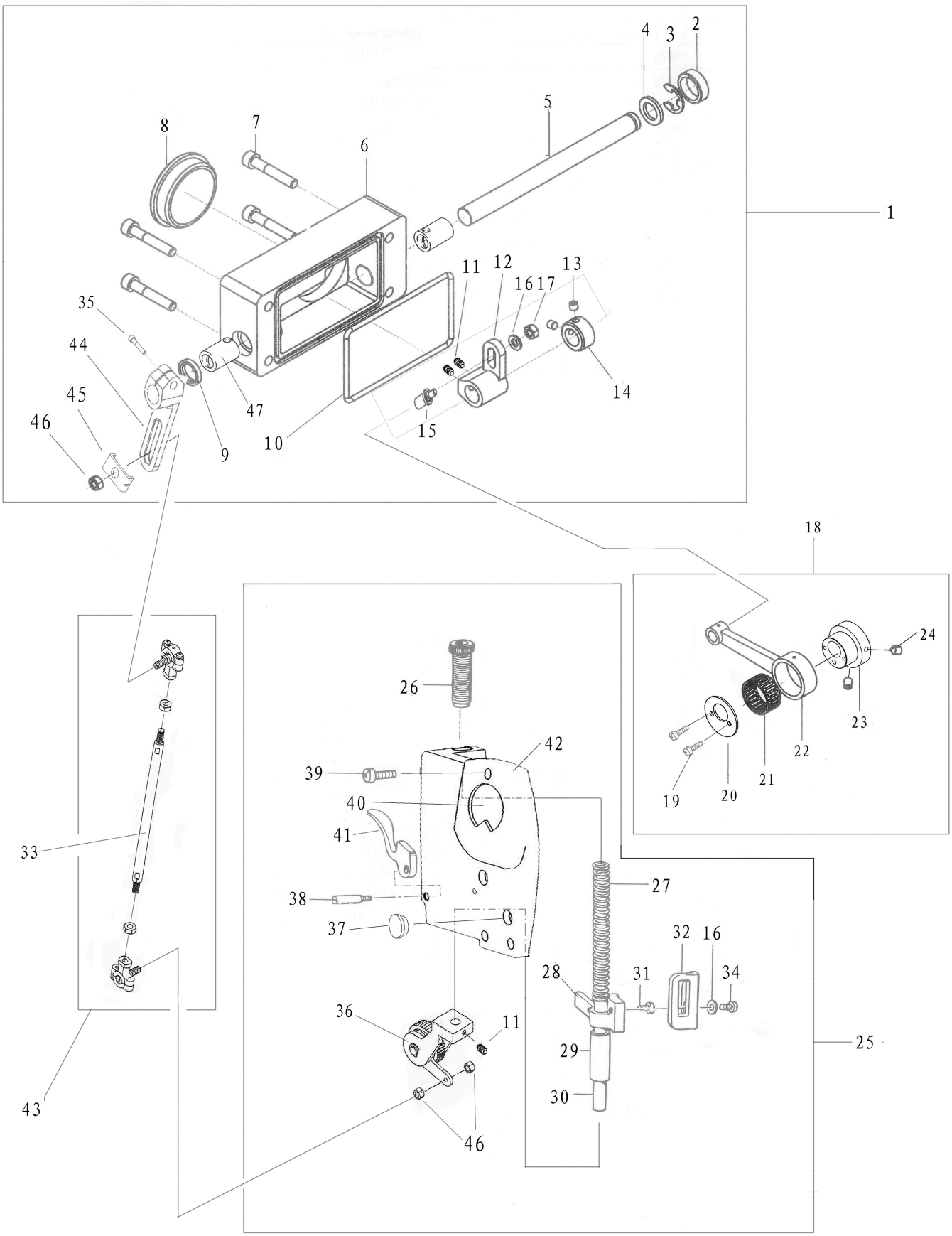

14. 后拖轮装置/Puller device mechanism

序号 REF. NO.	编号 CODE	名称	Name of parts	用量 Q'TY
1		后盖箱组件	Bracket Assembly	1
2	30522019	油封	Plug	1
3	H05011	GB/T896-1986卡簧	E-Ring	1
4	30128015	摆动连杆轴垫圈	Washer	1
5	30502045	拖轮轴	Shaft	1
6	301175	后盖	Bracket	1
7	207S13004	螺钉（M6X35）	Screw M6X35	4
8	30522069	油封	Plug	1
9	20122021	油封	Plug	1
10	30522070	后盖密封圈	O Ring	1
11	S10029	螺钉M6x0.75X5	Screw M6X0.75X5	3
12	30504035	曲柄	Crank	1
13	S09008	螺钉M5X5	Screw M5X5	2
14	30508001	挡圈	Collar	1
15	30126006	连杆销	Pin Screw	1
16	30128009	连杆销垫圈	Washer	2
17	N01004	螺母M5X5	Nut	1
18		拖轮偏心轮组件	Puller Eccentric Assembly	1
19	101S11006	螺钉SM1/8"X44 L=4.5	Screw SM1/8″X44 L=4.5	2
20	40612050	固定板	Thrust collar	1
21	B07036	滚针	Needle Bearing	1
22	12605003	主轴连杆	Connection	1
23	12610001	主轴偏心轮	Eccentric	1
24	116S14004	螺钉SM1/4"X40 L=6	Screw SM1/4″X40 L=6	2
25		面板组件	Face Plate Arm Assembly	1
26	40603019	调压螺钉1/2X28	Presser Adjust Screw1/2X28	1
27	12627004	弹簧	Spring	1
28	40609009	压脚轴连接块	Presser Bar Clamp	1
29	40603021	拉杆轴下套	Presser Bar Bush,D	1
30	40602016	拖轮轴	Puller Presser Bar	1
31	AS05038	压脚连接块螺钉M5X8	Screw M5X8	1
32	12612007	连接片	Link	1
33	12602003	拉杆轴	Presser Bar	1
34	409S11013	连接片螺钉SM5/64X28	screw SM5/64X28	1
35	S05019	螺钉M6X16	Screw M6X16	1
36	4061400800	拖轮组件	Puller	1
37	10122003	面板调节螺孔塞	Rubber Plug	2
38	40602013	固定销子	Pin	1
39	101S11001	螺钉SM3/16″X28 L=9	Screw SM3/16″X28 L=9	3
40	10137002	商标牌	Plare With Trademark	1
41	40601031	拖轮扳手	Presser Foot Lifter	1
42	12601004	面板	Face Plate Arm	1
43	4060402400	拉杆组件	Pitman Rod Assy	1
44	12604007	调节曲柄	Clutch Lifter	1
45	40612048	刻度指示板	Degreer Plate	1
46	402S16003	螺母	Nut	3
47	20103020	摆动连杆轴套	Bush	2